INSTALLATION MANUAL

MUD HOG® REAR WHEEL DRIVE

For Case IH

AF 7230, 8230, 9230 Combines

TUTHILL DRIVE SYSTEMS MODEL NUMBERS:

CNH14023 ***DUAL SPEED KIT FOR CASE IH AF 7230, 8230, 9230 COMBINES***

MUD HOG®

TERRA DRIVE SYSTEMS INC.
9098 W 800 S
Brookston, IN 47923
USA

(800) 348-2474
TDSdrive.com

D106483
CNH 84378753
Revised 3/2012

Table of Contents

Introduction and General Information 3

Safety Procedures 4

Selection of Axle Settings 5-6

Removal of Original Non-Powered Components 7

Installation of Stub Axles/Steering Anchors/Hose Guides 8-9

Installation of Wheel Drives 10

Setting Steering Stops 11

Installation of Steering Cylinders/Tie Rod 12

Valve and Valve Bracket Installation 13

Hose Routing – Wheel Drives to Valve 14-15

Installation of Manifold Blocks 16

Hose Routing – Valve to Manifold Block / Drain Manifolds 17

Mounting Wheels and Adjusting Toe-In 18

Installing Wire Harness 19

Mounting Rocker Switch/Activating PRA 20-21

Pre-Start Procedures 22

Start-Up Procedure 23

4WD Mud Hog® Vinyl Decal Application Instructions 24

Introduction and General Information

Introduction

This manual provides instructions for installing the Terra Drive Systems Single Speed and Dual Speed rear wheel drive on Case IH AFX hydrostatic drive combines. Some procedures may require referral to the combine Operator's and/or Service Manual.

A complete pictorial breakdown of all the individual parts in the Rear Drive System can be found in the Terra Drive Systems Parts Catalog. Refer to this catalog for proper identification of parts required for service.

General

The terms right and left in these instructions are the same as the operator's right hand and left hand when positioned in the operator's seat facing forward. **IMPORTANT**: Cleanliness is essential when installing or servicing hydraulic components. When making hydraulic connections, areas surrounding the connection should be steam cleaned or washed with solvent, so that contamination will not enter the system. Always keep the hoses, connectors and ports suitably capped or covered to keep contamination out of the system. **DO NOT** let dirt or water enter the system. **CAUTION:** Make sure that the system pressure is relieved before disconnecting any lines or connections. Pressurized fluid escaping from the system can cause serious personal injury.

SAFETY PROCEDURES

READ THESE PROCEDURES COMPLETELY.

1. Make sure you fully understand all controls BEFORE operating the MUD HOG® rear wheel assist.
2. The safety information given does not replace safety codes, insurance needs, or federal, state and local laws.
3. Standard safety procedures should be observed and practiced when operating or servicing the MUD HOG system. **CAUTION** should be practiced at all times.
4. All components **MUST** be securely and correctly mounted and connected BEFORE operating the system.
5. In the event of any malfunction in the system, the MUD HOG rear wheel assist should be turned "OFF" immediately and not operated again until the machine is correctly serviced.
6. When raising the rear of the machine, make sure that a dependable lifting device is used. Use jack stands whenever possible to support the machine. Always apply the "PARK" or "EMERGENCY BRAKE", and block the front wheels to prevent the machine from rolling.
7. **DANGER:** Escaping hydraulic fluid under pressure can have sufficient force to penetrate the skin, causing serious personal injury. Fluid escaping from a small hole can be almost invisible. Use a piece of cardboard or wood rather than your hands, to search for suspected leaks. If fluid penetrates your skin, contact a doctor immediately.
8. **DO NOT** extend the axles beyond the distance stated in this manual.
9. **DO NOT** alter axles in ANY manner, alteration may reduce the strength resulting in possible damage or personal injury.
10. **DO NOT** alter any component of the MUD HOG system. Unauthorized modification may result in damage or personal injury.
11. **DANGER:** Failure to follow proper procedures when mounting a tire on a wheel or rim can produce an explosion which may result in serious bodily injury. **DO NOT** attempt to mount a tire unless you have the proper equipment and experience to perform the job safely.
12. **WARNING**: Decals MUST be obeyed completely to prevent possible damage or injury. If decals are destroyed, lost, damaged or cannot be read, replace immediately.
13. **WARNING:** Any damaged high-pressure hose should be replaced with an equivalent reinforced hose.

Selection of Axle Setting

Refer to the following charts to set the axle according to CNH recommended settings. These charts will recommend the proper height, width and steering stop settings for your machine depending on your front and rear tires.

To properly select axle settings:

A. Locate the column at the top for your combine's front tire size, including axle extension.

B. Locate the row along the left side for your combines rear tire size.

C. Follow the front tire column down and the rear tire to the right until they intersect. The black square is the recommended combination for your tire sizes.

D. After finding the recommended rear tire row, follow that row back to the left to find the correct Axle Width Position setting, Height position and Steering Stop bolt setting.

E. Circle these settings for reference later on in the installation process.

Example: Machine: AF 7230, 8230, 9230; Front Tires: 900/65R32 Dished In with 316mm extensions, Rear Tires: 28L-26 R1

In this example the Axle Width position is **#4**, Height Position is **#2** and the steering stop bolt setting is **37mm**.

AFX 8010

Axle Position, Height Position and Steering Stop Chart

A

B

C

D & E

Steering Tires	Wheel Dished In mm (in)	Wheel Dished Out mm (in)	Axle Width Position	Height Position	# Stop bolt Length mm (in)	Treadwidth mm (in)	30.5L-32 R2 - Dished Out 3478 (136.9)	800/65R32 R1W - Dished In 3048 (120.0)	800/65R32 R1W - Dished Out 3478 (136.9)	800/65R32 R1W - Dished In with 316mm Extensions 3680 (144.9)	900/60R32 R1W - Dished In 3048 (120.0)	900/60R32 R1W - Dished Out 3478 (136.9)	900/60R32 R1W - Dished In with 316mm Extensions 3680 (144.9)	900/65R32 R2 - Dished In 3048 (120.0)	900/65R32 R3 - Dished Out 3478 (136.9)	900/65R32 R4 - Dished In with 316mm Extensions 3680 (144.9)	76x50.00-32 HF3 - Dished In with 316mm Extensions 3680 (144.9)	Duals: 18.4R42 R1W - With 265mm Extensions 3048 (120.0) Inner 4572 (180.0) Outer	20.8R42 R1W - With 265mm Extensions 3048 (120.0) Inner 4572 (180.0) Outer	20.8R42 R2 - With 265mm Extensions 3048 (120.0) Inner 4572 (180.0) Outer	420/80R46 R1 - With 138mm Extensions 3020 (118.9) Inner 4060 (161.0) Outer	420/80R46 R3 - With 316mm Extensions 3376 (132.9) Inner 4446 (175.0) Outer	620/70R42 R1W - With 265 mm Extensions 3048 (120.0) Inner 4572 (180.0) Outer
480/70R30 R1W	34 (1.3)		3	2	45 (1.8)	3150 (124.0)		■			■													
	34 (1.3)		3	3	37 (1.5)	3150 (124.0)								■				■	■		■			■
	34 (1.3)		3	4	26 (1.0)	3150 (124.0)														■				
		50 (2.0)	3	3	20 (0.8)	3322 (130.8)																	■	
	34 (1.3)		5	2	13 (0.5)	3450 (135.8)	■		■			■												
	34 (1.3)		5	3	13 (0.5)	3450 (135.8)									■									
		50 (2.0)	5	2	13 (0.5)	3622 (142.6)				■			■											
		50 (2.0)	5	3	13 (0.5)	3622 (142.6)										■								
		50 (2.0)	5	4	13 (0.5)	3622 (142.6)											■							
540/65R30 R1W	34 (1.3)		3	3	43 (1.7)	3154 (124.2)		■			■							■			■			
	34 (1.3)		3	4	33 (1.3)	3154 (124.2)								■					■	■				■
		50 (2.0)	3	3	20 (0.8)	3325 (130.9)																	■	
		50 (2.0)	4	2	13 (0.5)	3475 (136.8)			■			■												
		50 (2.0)	4	3	13 (0.5)	3475 (136.8)	■																	
		50 (2.0)	4	4	13 (0.5)	3475 (136.8)									■									
		50 (2.0)	5	2	13 (0.5)	3625 (142.7)				■			■											
		50 (2.0)	5	4	13 (0.5)	3625 (142.7)										■	■							
600/65R28 R1W	49 (1.9)		4	3	47 (1.9)	3267 (128.6)		■			■			■				■	■					■
	49 (1.9)		4	4	41 (1.6)	3267 (128.6)														■				
	49 (1.9)		5	2	33 (1.3)	3417 (134.5)	■		■			■												
	49 (1.9)		5	3	24 (0.9)	3417 (134.5)									■									
	49 (1.9)		7	2	13 (0.5)	3717 (146.3)				■			■											
	49 (1.9)		7	3	13 (0.5)	3717 (146.3)										■								
	49 (1.9)		7	4	13 (0.5)	3717 (146.3)											■							
23.1-26 R2		80 (3.1)	4	2	43 (1.7)	3529 (138.9)	■					■			■			■	■		■	■	■	■
		80 (3.1)	4	3	41 (1.6)	3529 (138.9)														■				
		80 (3.1)	5	2	33 (1.3)	3679 (144.8)							■			■								
		80 (3.1)	5	3	31 (1.2)	3679 (144.8)										■	■							
		80 (3.1)	6	1	43 (1.7)	3829 (150.7)				■														
28L-26 R1		140 (5.5)	3	2	47 (1.9)	3500 (137.8)	■					■			■				■					■
		140 (5.5)	3	3	37 (1.9)	3500 (137.8)														■				
		140 (5.5)	4	2	37 (1.5)	3650 (143.7)							■			■								
		140 (5.5)	4	3	35 (1.4)	3650 (143.7)											■							
		140 (5.5)	5	1	41 (1.6)	3800 (149.6)				■														
28L-26 R2		140 (5.5)	4	2	45 (1.8)	3648 (143.6)	■									■			■					■
		140 (5.5)	4	3	45 (1.8)	3648 (143.6)											■			■				

Stop bolt length measured at side of socket set screw from cast surface closest to cylinder.

Tire Selection Chart 7230, 8230 and 9230 - 2012 Combine Model

AFX7230 8230 & 9230 For North America

Axle Position, Height Position & Steering Stop Chart

Steering Tires	Wheel Dished In mm (in)	Wheel Dished Out mm (in)	Axle Width Position	Height Position	Stop bolt Length mm (in)	Treadwidth mm (in)	Tracks (36" Wide)	620/70R42 166A8 R1W with 265 mm Extension		520/85R42 162A8 R2 with 265 mm Extension		520/85R42 162A8 R1 & R1W with 265 mm Extension		20.8-42 14 PR R1 with 265 mm Extension		76x50.00-32 16 PR HF3 Dished In with 316 mm Extension	900/75R32 184A8 R1W Dished In with 316 mm Extension	900/75R32 184A8 R1W Dished Out	900/65R32 178A8 R2 Dished In with 316 mm Extension	900/65R32 178A8 R2 Dished Out	900/65R32 178A8 R2 Dished In	900/60R32 185A8 R1W Dished In with 316 Extension	900/60R32 176A8 R1 Dished Out	900/60R32 176A8 R1W Dished In	800/70R38 181A8 R1W Dished In with 316 mm Extension	800/70R38 181A8 R1W Dished Out	800/70R38 181A8 R1W Dished In
							Duals																				
						Treadwidth mm (in)	3899 (153.5)	4572 (180.0)	3048 (120.0)	4572 (180.0)	3048 (120.0)	4572 (180.0)	3048 (120.0)	4572 (180.0)	3048 (120.0)	3680 (144.9)	3680 (144.9)	3478 (136.9)	3680 (144.9)	3478 (136.9)	3048 (120.0)	3680 (144.9)	3478 (136.9)	3048 (120.0)	3680 (144.9)	3478 (136.9)	3048 (120.0)
540/65R30 150A8 R1W (7230 Model Only)	34 (1.3)		3	3	40 (1.6)	3144 (123.8)																		■			
	34 (1.3)		3	4	30 (1.2)	3144 (123.8)		■	■	■	■	■	■	■				■			■						■
		50 (2.0)	4	3	13 (0.5)	3462 (136.3)																	■				
		50 (2.0)	4	4	13 (0.5)	3462 (136.3)														■						■	
		50 (2.0)	5	3	13 (0.5)	3612 (142.2)																■					
		50 (2.0)	5	4	13 (0.5)	3612 (142.2)											■		■						■		
600/65R28 154A8 R1W	49 (1.9)		4	3	40 (1.6)	3263 (128.5)		■				■	■	■							■			■			
	49 (1.9)		4	4	30 (1.2)	3263 (128.5)				■	■																■
	49 (1.9)		5	3	13 (0.5)	3413 (134.4)														■			■				
	49 (1.9)		5	4	13 (0.5)	3413 (134.4)																				■	
	49 (1.9)		7	3	13 (0.5)	3713 (146.2)													■			■					
	49 (1.9)		7	4	13 (0.5)	3713 (146.2)																			■		
600/70R28 161A8 R1W	49 (1.9)		3	4	56 (2.2)	3112 (122.5)				■	■																
	49 (1.9)		4	3	38 (1.5)	3262 (128.4)		■	■			■	■	■	■						■			■			
	49 (1.9)		4	4	30 (1.2)	3262 (128.4)																					■
	49 (1.9)		5	3	13 (0.5)	3412 (134.3)														■			■				
	49 (1.9)		5	4	13 (0.5)	3412 (134.3)																				■	
		65 (2.6)	4	4	13 (0.5)	3491 (137.4)												■									
	49 (1.9)		6	4	13 (0.5)	3562 (140.2)											■										
	49 (1.9)		7	3	13 (0.5)	3712 (146.1)													■			■					
	49 (1.9)		7	4	13 (0.5)	3712 (146.1)										■									■		
750/65R26 166A8 R1W		125 (4.9)	3	3	56 (2.2)	3457 (136.1)				■	■							■								■	
		125 (4.9)	4	2	48 (1.9)	3607 (142.0)		■	■			■	■	■	■				■			■					
		125 (4.9)	4	3	46 (1.8)	3607 (142.0)										■	■								■		
		125 (4.9)	6	3	24 (0.9)	3907 (153.8)	■																				
28L-26 16 PR R2		125 (4.9)	3	3	56 (2.2)	3457 (136.1)												■								■	
		125 (4.9)	4	2	46 (1.8)	3607 (142.0)													■			■	■				
		125 (4.9)	4	3	46 (1.8)	3607 (142.0)		■	■	■	■	■	■			■	■								■		
		125 (4.9)	6	3	21 (0.8)	3907 (153.8)	■																				

Removal of Original Non-Powered Components

Park machine in a clean work area. Allow adequate room to remove the rear axle components. Apply "PARK or EMERGENCY BRAKE" and block the front wheels to prevent the machine from rolling. Using a suitable lift device or hoist, raise the rear of the machine so that the rear tires are several inches off the ground. Place the jack stands securely under the machine's rear center section.

Disconnect the steering hydraulic hoses.

Follow the procedures in the Case IH Service manual and remove the steering cylinders (1) from the non-powered ends, the tie rod (2) and the non-powered wheel ends (3).

Save the tie rod and related hardware for re-use later. Remove steering cylinder anchors and axle bolts, washers, nuts and spacers, only if recommended axle width setting is different than current axle setting. Refer to Axle Settings Chart for your combine.

CAUTION: The non-powered wheel end assemblies are extremely heavy. Use supporting devices of adequate capacity while removing these components.

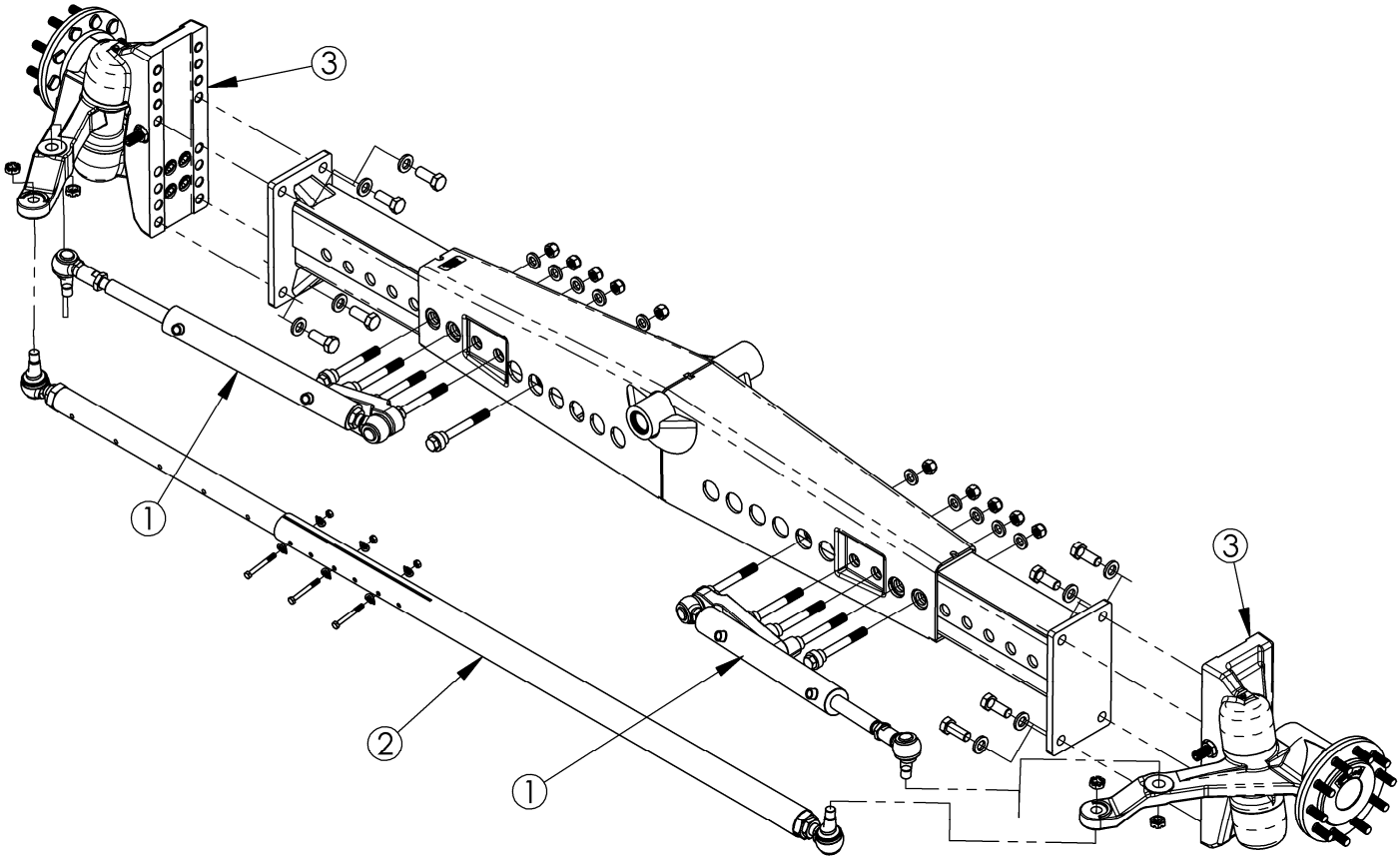

Installation of Stub Axles/Steering Anchors/Hose Guides

The steering axle has 7 tread width positions. Refer to the axle selection charts for the recommended width setting for your combine.

All M20 nuts should be tightened to 440-485 Nm (325-358 lb-ft).

For the narrowest tread settings, positions 1, 2, 3 & 4, the hoses from the wheel drive to the valve route toward the back of the axle and route through the hose loop (10) and across the top of the axle. For the widest tread settings, positions 5, 6 & 7, the hoses route to the front of the axle. Be sure the hose loops (10) are positioned properly to avoid contact with the axle stops and lower frame when the axle oscillates.

Note: Hose Guide Bracket (9) is not used for axle position 1-3. Assemble hose guide pivoted against cylinder anchor for axle position 1 through 3.

1 - M20 Locknut
2 - M20 Flat Washer
3 - 47x33x8 Flat Washer
4 - Step Bushing
5* - Bushing
6 - M20x260 Hex Head Bolt
7* - M20x240 Hex Head Bolt
8 - M20x180 Hex Head Bolt
9* - Hose Guide Bracket
10* - Hose Guide Loop
11 - Steering Anchor
*Supplied in kit. Also 2 each of items 1 and 2 supplied in kit.

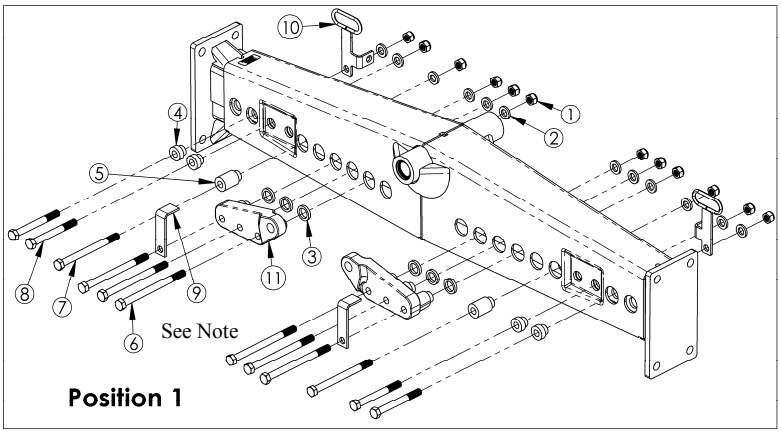

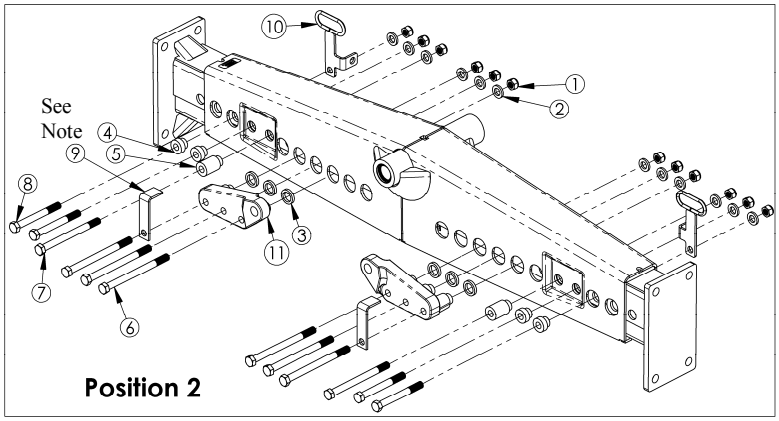

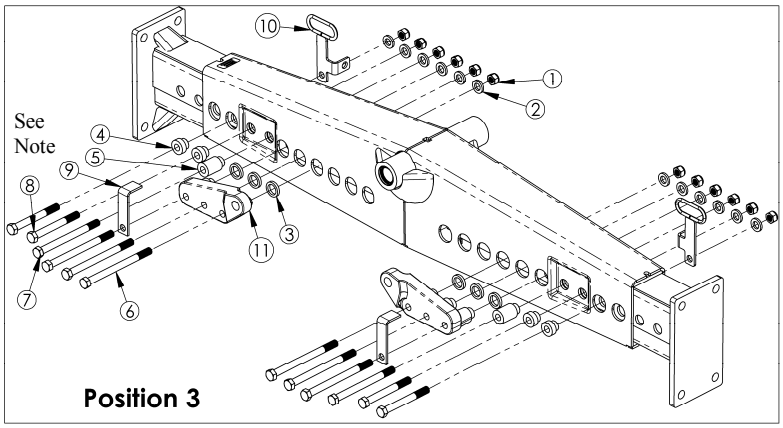

1 - M20 Locknut
2 - M20 Flat Washer
3 - 47x33x8 Flat Washer
4 - Step Bushing
5* - Bushing
6 - M20x260 Hex Head Bolt
7* - M20x240 Hex Head Bolt
8 - M20x180 Hex Head Bolt
9* - Hose Guide Bracket
10* - Hose Guide Loop
11 - Steering Anchor
*Supplied in kit. Also 2 each of items 1 and 2 supplied in kit.

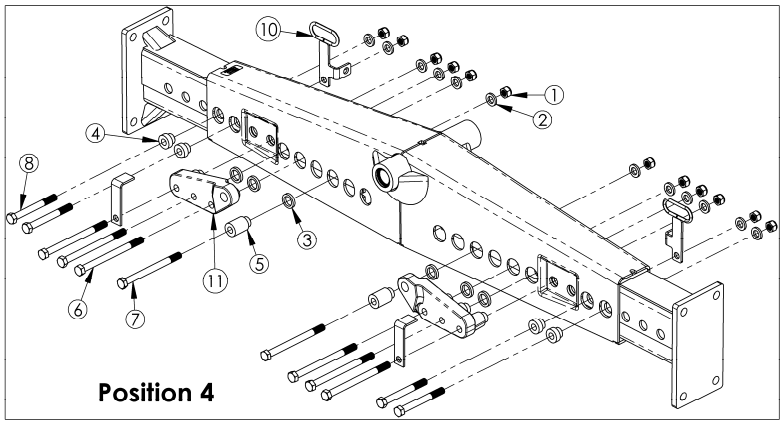

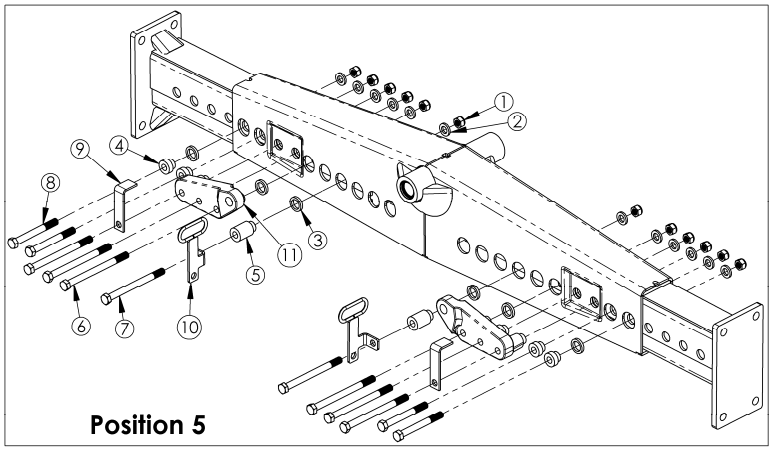

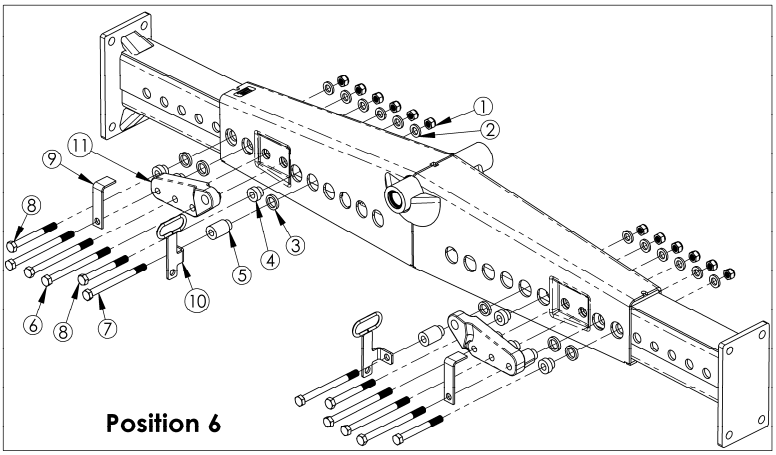

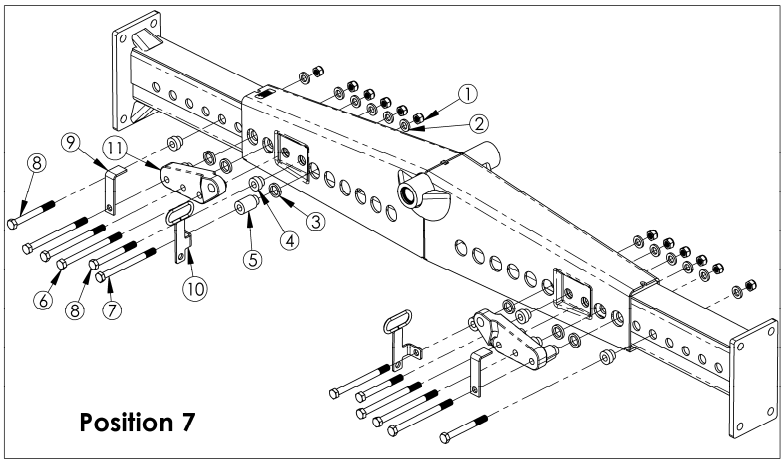

Installation of Wheel Drives

The wheel drive can be positioned on the axle in 4 different positions. This allows the rear of the machine to raise or lower as required to maintain a level machine. Refer to the axle selection charts for the recommended height setting for your combine. Re-use M24 x 60mm long bolts (1) and washer (2) from original axle and tighten to 780-860 Nm (575-634 lb-ft).

⚠ CAUTION: The powered wheel drive assemblies are extremely heavy. Use lifting devices of adequate capacity while installing these components.

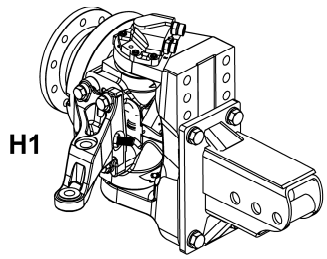

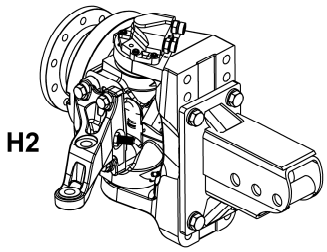

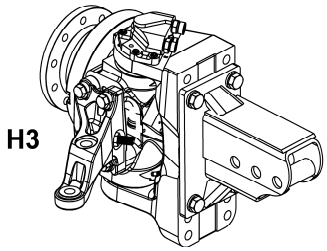

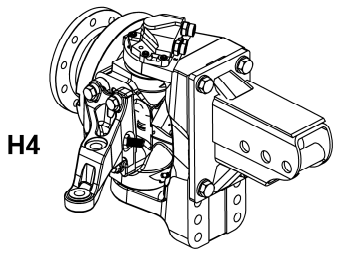

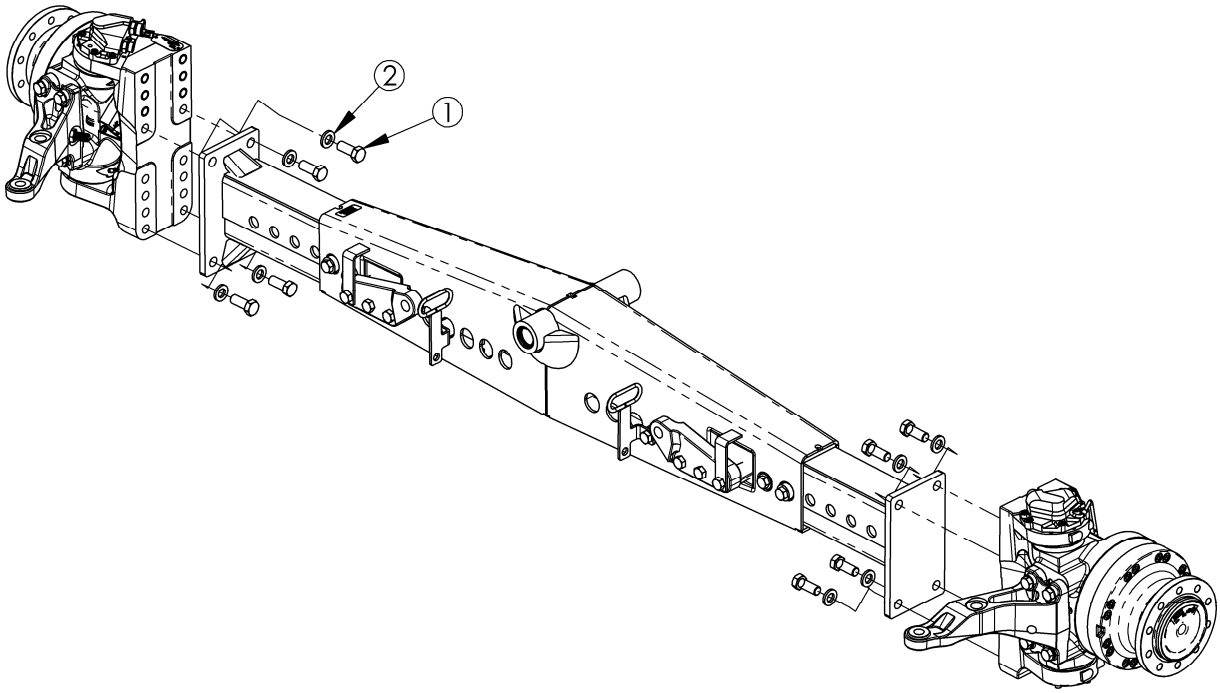

Setting Steering Stops

The wheel drives are pre-assembled with steering stop bolts (1) and jam nuts (2). Refer to the axle selection charts for the recommended steering stop bolt setting for your combine. Set the stop bolt to the recommended setting (X) to avoid machine interference with the tire when the axle oscillates.

The stop bolt length is measured at side of socket set screw from cast surface closest to steer cylinder to the end of the bolt.

While holding the stop bolt, tighten jam nut to 136-176 Nm (100-130 lb-ft).

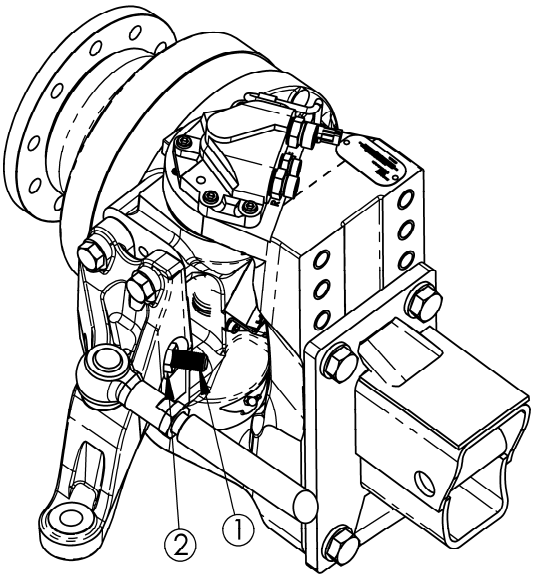

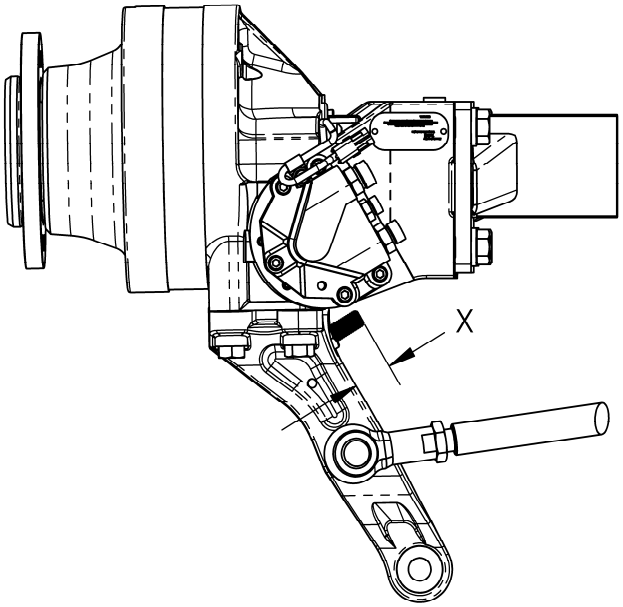

Installation of Steering Cylinders/Tie Rod

Disassemble tie rod by removing the 3 bolts (1), nuts (2) and 6 formed washers (3). This will allow the inner tie rod to slide inside the outer tube.

Lift tie rod (4) into tapered holes on wheel ends. Tighten castle nuts (5) to 250-280 Nm (184-206 lb-ft). After tightening nut, if necessary, continue to tighten nut until the next nut slot is aligned with the hole in the ball joint stud. Install and bend cotter pin over the top.

Prior to installing cylinder, adjust cylinder ends as shown. These dimensions will be re-confirmed after toe-in is set. Note in the chart below that there are different settings for the AGR cylinder on one side of the axle which has a steering sensor installed. The AGR cylinder is longer and uses the settings that are 10mm greater and are in the parenthesis.

Install cylinder (6) into tapered holes. Align hole in ball joints so that cotter pin can be installed. For ball joints at the wheel drives, it is necessary for the hole to be parallel with the edge of the steering bracket on the wheel drive. Tighten castle nuts (7) to 250 Nm (184 lb-ft). Do not install cotter pins at this time.

After completing toe-in adjustment, confirm that max steer angle can be achieved. Steering stop bolts must contact c-frames during maximum LH and RH turns. If steer cylinders limit turning, cylinder ball joints must be adjusted until steer stop bolts contact c-frames.

When steer cylinder adjustment is completed, tighten cylinder castle nuts (7) to 250-280 Nm (184-206 lb-ft). If necessary, continue tightening until next nut slot is aligned with the hole in the ball joint stud. Install and bend cotter pin over the top.

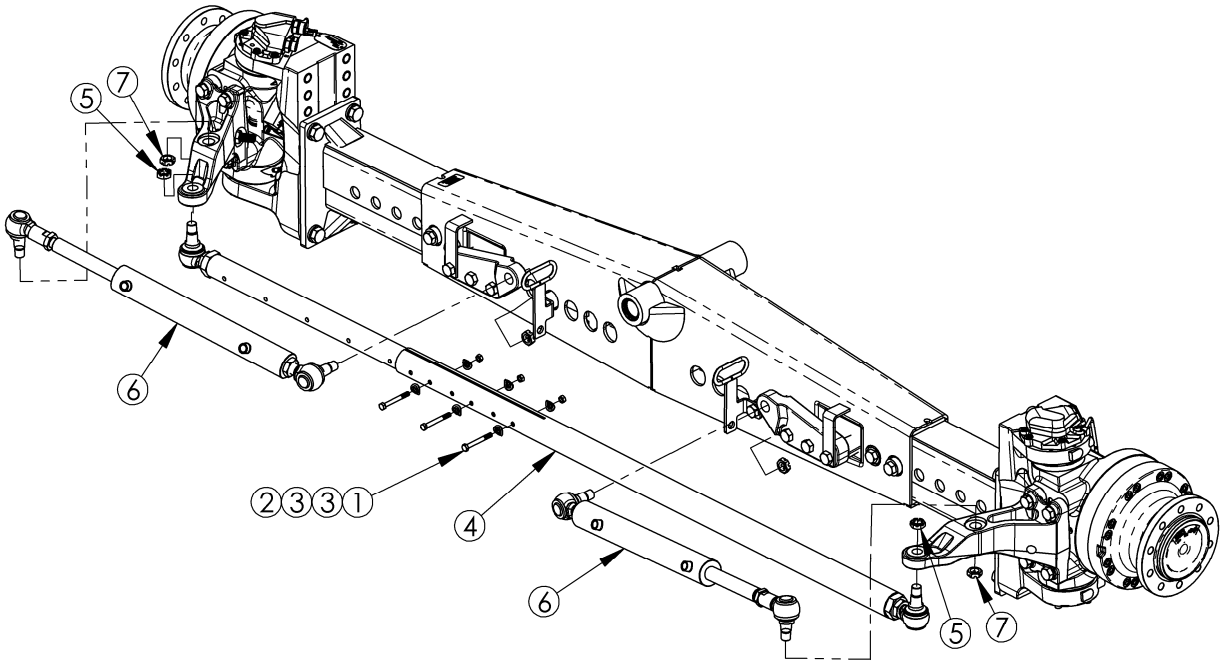

Cylinder Length non-AGR (AGR)	Height Position
759 (769) mm	H1
753 (763) mm	H2, H3, H4

Valve and Valve Bracket Installation

Valve and valve brackets may be assembled at the factory.

If necessary, assemble valve brackets as shown using 2 - M10 x 40mm bolts (1), 2 - M10 locknuts (2) and 4 – washers (3). Tighten locknuts to 38-46 Nm (28-34 lb-ft). Install valve to valve bracket using 3 - M10 x 100mm bolts (4), 3 - M10 locknuts (5) and 3 – washers (6). Tighten locknuts to 38-46 Nm (28-34 lb-ft).

Install drain tee (7) and 2 - 90 degree fittings (8) to valve bracket as shown. With tee in vertical position, tighten jam nut (9) to 43-47 Nm (32-35 lb-ft). Do not tighten 90-degree elbows at this time.

Lift valve and valve bracket assembly and install to center frame member above axle using 2 - ¾ x 2 ½ bolts (12) and 2 - serrated nuts (13). Tighten bolts to 491-607 Nm (362-448 lb-ft).

⚠ CAUTION: The valve assembly is heavy. Use lifting device of adequate capacity while installing these components.

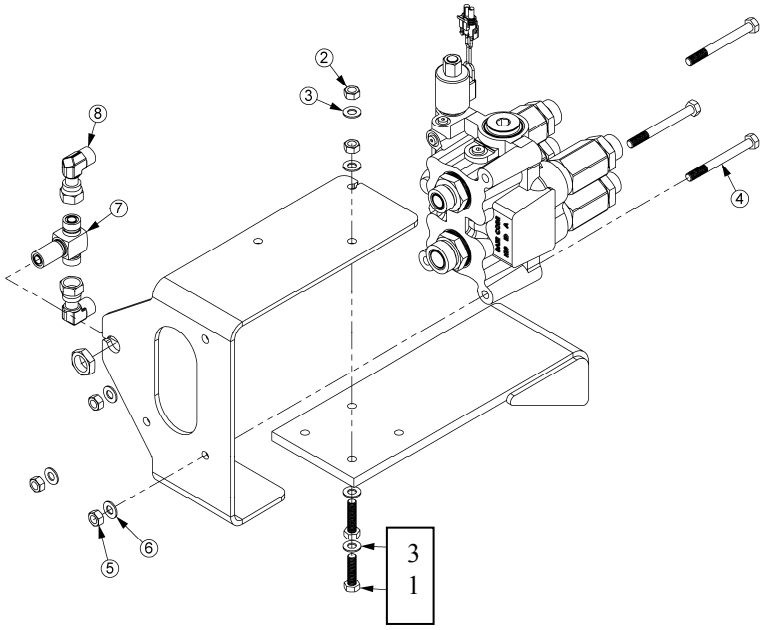

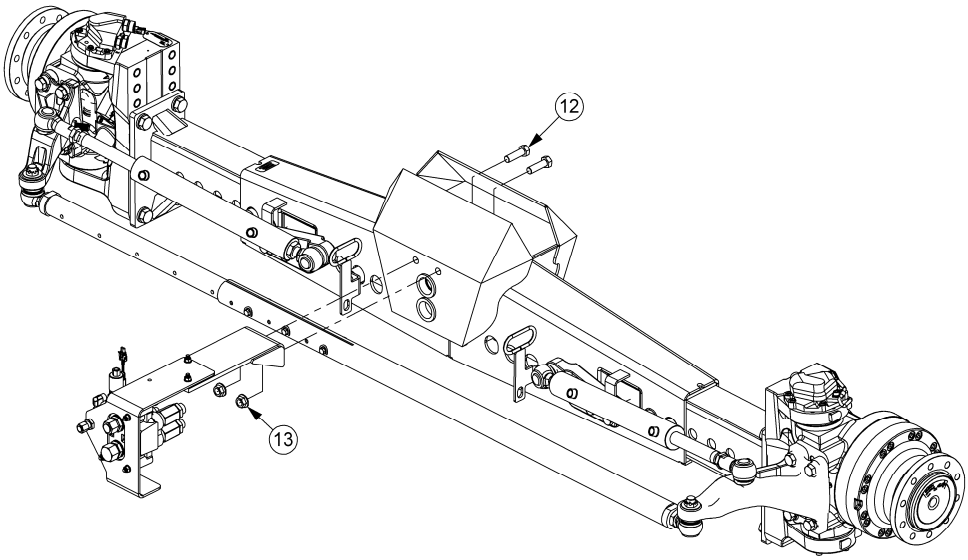

Hose Routing – Wheel Drives to Valve

The right hand and left hand sets of hoses are different.

The right hand side consists of the following:
(1) 66” long high pressure hose with –12 connectors crimped on both ends
(1) 65” long high pressure hose with –10 connectors crimped on both ends
(1) 77” long drain hose with –08 connectors crimped on both ends.

The left hand side consists of the following:
(1) 61.5” long high pressure hose with –12 connectors crimped on both ends
(1) 65” long high pressure hose with –10 connectors crimped on both ends
(1) 77” long drain hose with –08 connectors crimped on both ends.

Organize all hoses so that the 45-degree connections are together. Slide each set through a 48” long piece of protective sleeve.

Refer to the axle selection charts for the recommended width setting for your combine.

Tread width settings 1, 2, 3 & 4
Route the straight ends of the hoses through the hose loop, across the axle and toward the valve. Hoses should be positioned above the cylinder bracket on the axle but below the “L” bracket as shown. (The “L” bracket is not used for axle positions 1, 2, 3. Assemble “L” bracket pivoted against cylinder anchor for axle positions 1, 2, 3.)
Position hoses at front of axle to avoid contact with cylinder and tie rod.
Assemble the 45° swivel fittings onto the flow regulators at the valve. Position fittings to provide hose clearance to lower frame, at axle pivot.
The 45-degree hose connectors should be properly positioned toward the rear of the axle. Starting at the wheel drive install and tighten each of the hose connectors. Tighten the –12 ORFS “Forward” Hose end to 88-99 Nm (65-73 lb-ft). Tighten the –08 ORFS “Drain” Hose end to 43-47 Nm (32-35 lb-ft). Tighten the –10 ORFS “Reverse” Hose end to 60-68 Nm (44-50 lb-ft). Tighten the -12 ORFS swivel fittings to 88-99 Nm (65-73 lb-ft). Tighten the -10 ORFS swivel fittings to 60-68 Nm (44-50 lb-ft). Check that the hoses are not touching the wheel drive.

Tread width settings 5, 6, & 7
Route the straight ends of the hoses below the “L” bracket, above the cylinder, through the hose loop and toward the valve as shown. Position hoses at front of axle to avoid contact with cylinder and tie rod.
Assemble the 45° swivel fittings onto the flow regulators at the valve. Position fittings to provide hose clearance to lower frame, at axle pivot.
The 45-degree hose connectors should be properly positioned toward the front of the axle. The middle drain hose connector will need to be routed upward to avoid interference with larger hose.

Treadwidth Settings 5, 6, 7

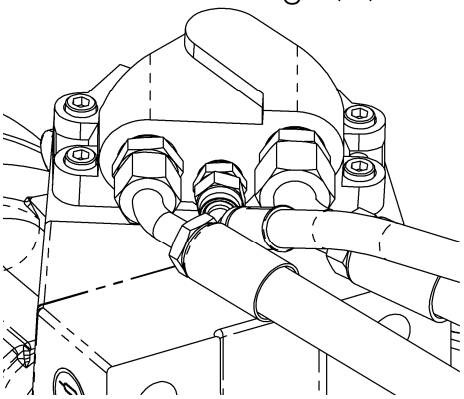

Starting at the wheel drive install and tighten each of the hose connectors. Tighten the –12 ORFS “Forward” Hose end to 88-99 Nm (65-73 lb-ft). Tighten the –08 ORFS “Drain” Hose end to 43-47 Nm (32-35 lb-ft). Tighten the –10 ORFS “Reverse” Hose end to 60-68 Nm (44-50 lb-ft). Tighten the -12 ORFS swivel fittings to 88-99 Nm (65-73 lb-ft). Tighten the -10 ORFS swivel fittings to 60-68 Nm (44-50 lb-ft). Check that the hoses are not touching the wheel drive.

Connect the straight ends of the high-pressure hoses to the 45° swivel fittings. Tighten the –12 ORFS “Forward” Hose ends to 88-99 Nm (65-73 lb-ft). Tighten the –10 ORFS “Reverse” Hose ends to 60-68 Nm (44-50 lb-ft).

Connect right hand drain to lower fitting on drain tee. Route the left hand drain hose to the upper fitting on drain tee. Tighten hose ends and 90-degree elbows to 43-47 Nm (32-35 lb-ft).

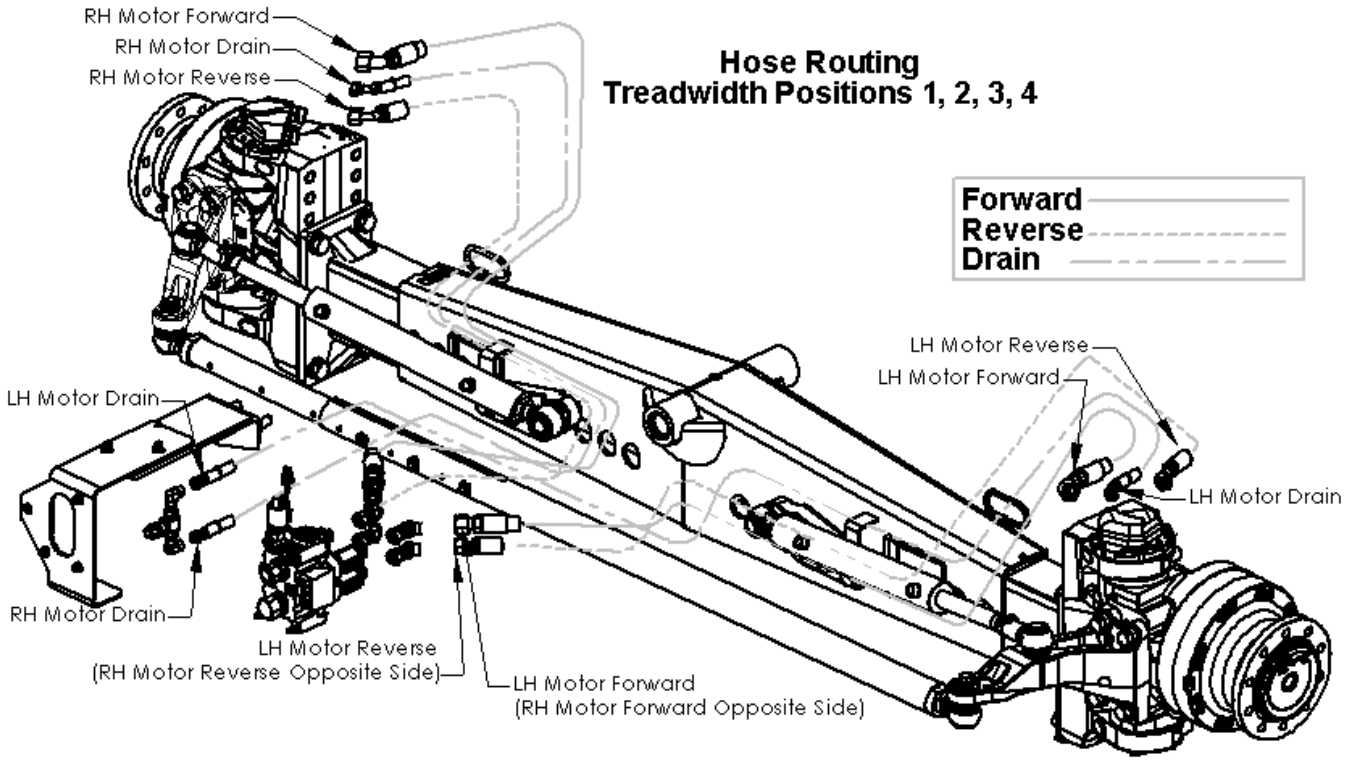
Hose Routing
Treadwidth Positions 1, 2, 3, 4
Forward
Reverse
Drain
RH Motor Forward
RH Motor Drain
RH Motor Reverse
LH Motor Drain
RH Motor Drain
LH Motor Reverse
(RH Motor Reverse Opposite Side)
LH Motor Forward
(RH Motor Forward Opposite Side)
LH Motor Reverse
LH Motor Forward
LH Motor Drain

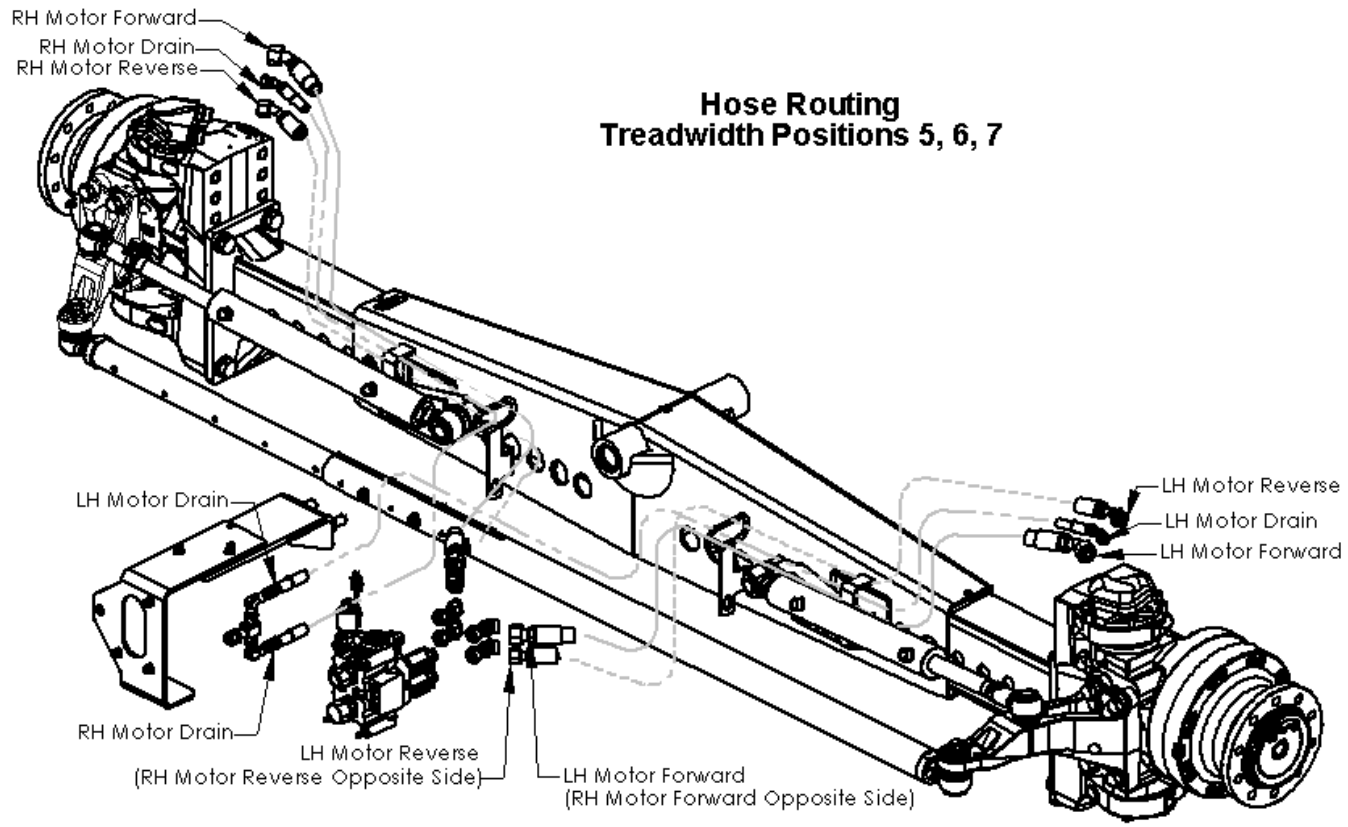
Hose Routing
Treadwidth Positions 5, 6, 7
RH Motor Forward
RH Motor Drain
RH Motor Reverse
LH Motor Drain
RH Motor Drain
LH Motor Reverse
(RH Motor Reverse Opposite Side)
LH Motor Forward
(RH Motor Forward Opposite Side)
LH Motor Reverse
LH Motor Drain
LH Motor Forward

Installation of Manifold Blocks

Each unit is supplied with two manifold block kits that allow the PRA hydrostatic lines to connect to the hydrostatic lines running from the pump to the front motor.

Remove the flange connections on the hydrostatic pump. Make sure the manifold block and hose connections are clean. Using the 8 supplied M14 x 90mm bolts (12 pt.) (1) and re-using existing washers (2), install the manifold adapter blocks (3) between the pump and the flange connectors; re-connect the two split flange connections of the hydrostatic hoses. Tighten bolts to 172-188 Nm (127-139 lb-ft).

Do not tighten any fittings or adapter until all connections are complete.

In the side port of the upper manifold block, install the supplied –12 size 90-degree "Forward" adapter (4). Do not tighten at this time.

In the side port of the lower manifold block, install the supplied –16 size 90-degree "Reverse" adapter (5). Do not tighten at this time.

Connect the 90 degree end of the 173 inch (4400mm) long high pressure hose (6) to the valve. The upper –12 connection is "Forward". Connect the 90 degree end of the 168 inch (265mm) long high pressure hose (7) to the valve. The lower –16 connection is "Reverse".

Connect the 90 degree –06 end of the 138 inch long drain hose (8) to the bottom fitting on the valve.

Connect the 90 degree –08 end of the 176 inch long drain hose (9) to the tee fitting on the right hand side of the valve.

Route the hoses toward the left hand side of the machine, through hose protector (10) and up to the manifold blocks.

Attach the straight hose ends of the high pressure hoses to the manifold blocks. The –12 connection is "Forward" and the –16 connection is "Reverse".

See next page for drain hose connections and torque specifications.

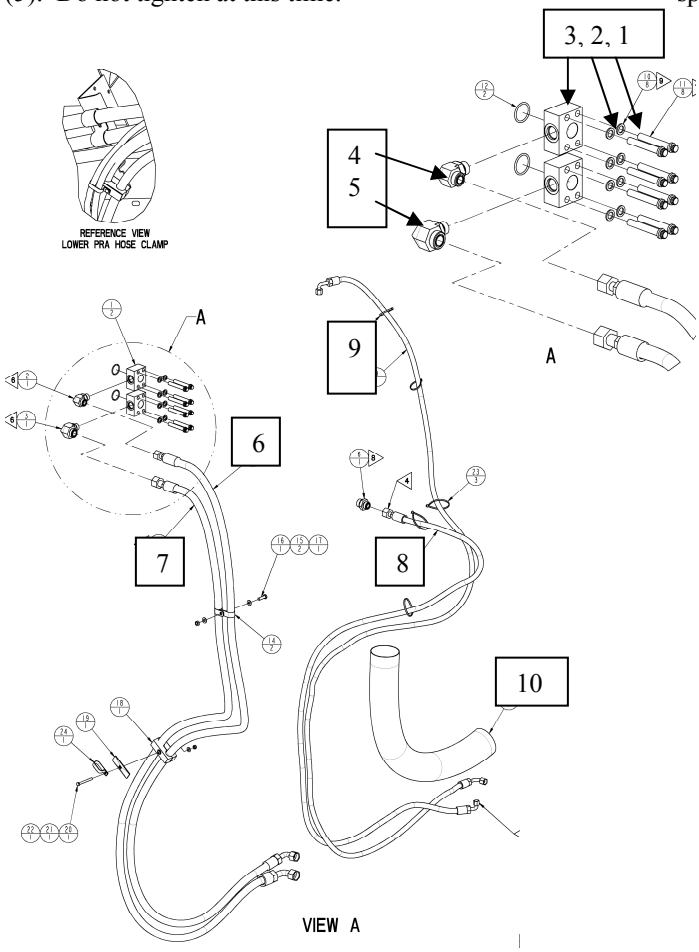

Hose Routing – Valve to Manifold Block/Drain Manifolds

In the lower corner of the PTO oil pan, remove the M33 plug. Install the supplied Metric M33 x –12 ORS adapter (5) in this port. Connect the straight –12 end of the 138” long drain hose (3) to this adapter.

At the top right hand side of the hydrostatic pump connect a 90 degree -8 end of the 176” long drain hose (4) to the drain manifold.

Route and secure hoses as shown to prevent contact from any moving parts.

Tighten all hose ends and adapters on valve, manifold blocks and adapters at this time. Make sure there are no twists or unnecessary bends in hoses prior to tightening.

ORFS FITTINGS		
DASH SIZE SAE	TORQUE	
	Nm	lb-ft
-6	24-27	18-20
-8	43-47	32-35
-12	90-95	66-70
-16	125-135	92-100

ORB FITTINGS		
THREAD SIZE	TORQUE	
	Nm	lb-ft
-12 ORB	170-183	125-135
-16 ORB	270-300	199-221
M33	186-205	137-151

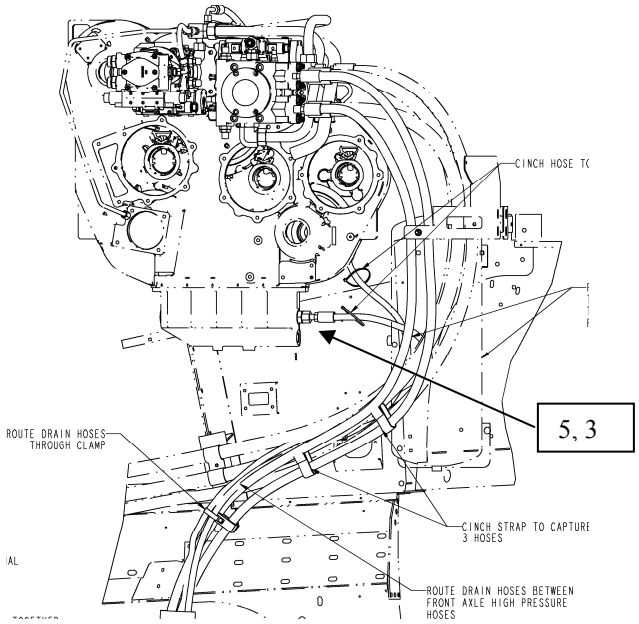

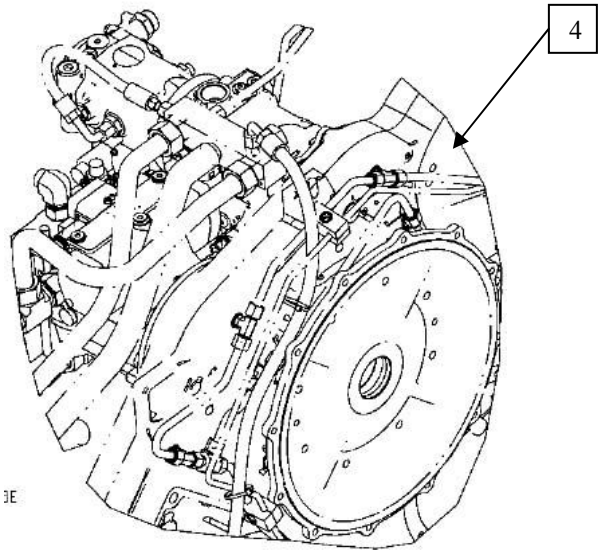

REFERENCE ISOMETRIC VIEW
MOTOR DRAIN HOSE ROUTING

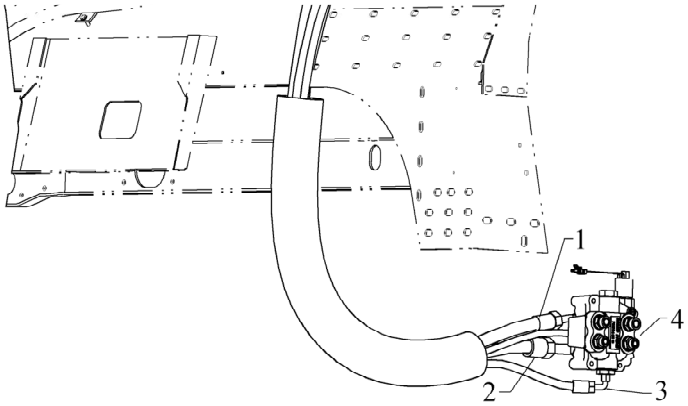

Mounting Wheels and Adjusting Toe-In

Mounting Wheels

Mount the wheels onto the wheel motor hub flanges in the correct orientation for your combine. Refer to the axle settings chart at the beginning of this manual. Install the lug bolts (1) and spacers (2) and tighten bolts to 550-610 Nm (406-450 lb-ft). Install torque decal (3) to hub face of motors. Check wheel bolt torque after 1 hour of operation, then after 10 hours of operation for 1 week and thereafter on a weekly basis. Check tire pressure and adjust as necessary. See Tire Selection Chart in CNH AF Operators Manual, Section 8.

Adjusting Toe-In

The steering wheels should have the correct amount of toe-in, otherwise premature tire wear may occur. The distance between the steering wheels must be smaller at the front than the rear.

Set the steering wheels in the straight ahead position. Set toe-in 8mm to 12mm (5/16" to 1/2") closer in the front than in the rear. Measure toe-in from center of tire to center of tire, preferably at the height of the wheel centers, at the same height from the ground in the front and in the rear.

Loosen tie-rod jam nuts (4). Adjust tubes as necessary to align the 2nd, 4th and 6th holes in outer tie rod with holes through inner tie rod. Note: Attempt to maintain equal amounts of exposed threads on both tie-rod ends. Re-install original tie-rod bolts (5), formed washers (6) and nuts (7) through holes. Tighten nuts to 49-60 Nm (36-44 lb-ft). Tighten tie rod jam nuts (4) to 290-320 Nm (214-236 lb-ft).

Check maximum steer angle and adjust steer cylinders as necessary. See section "Installation of Steering Cylinders/Tie Rod".

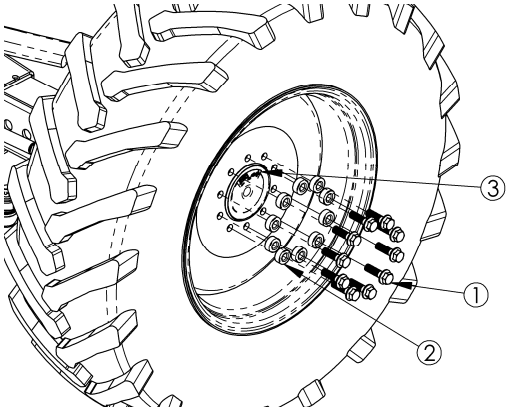

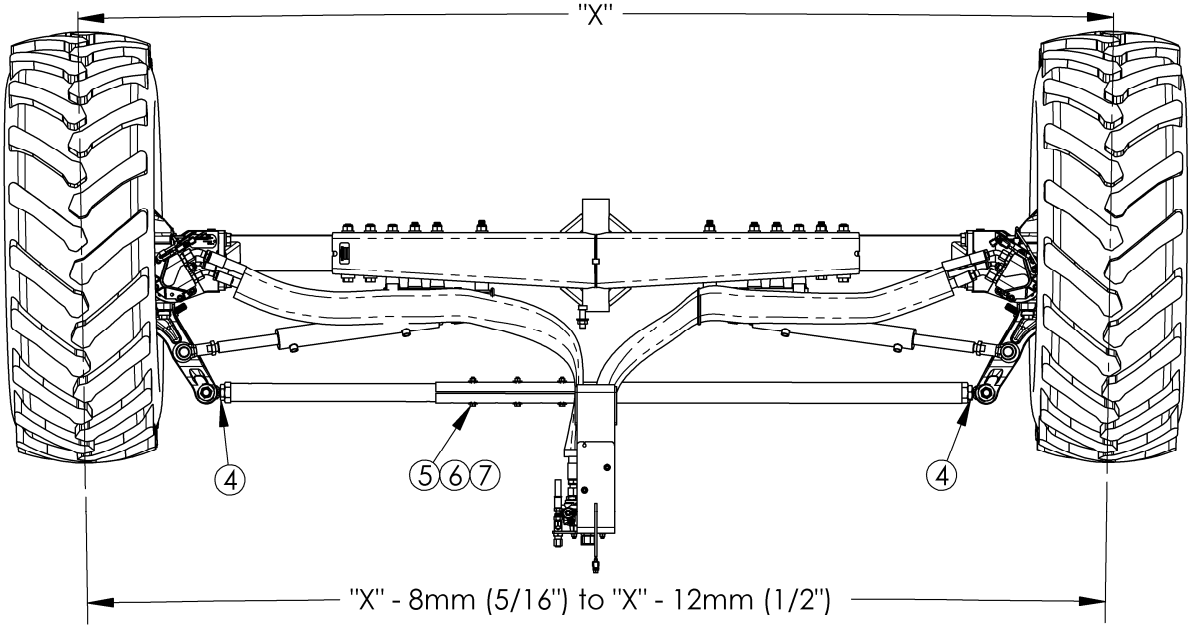

Installing Wire Harness

Valve Wire Harness

Use the supplied 32” long wire harness to connect the valve connector to an existing PRA pigtail on the frame just above the axle.

Dual Speed Wiring

Route the dual speed wire harness (1) from the valve bracket (2) through the hose guide loop (3) and under hose guide (4) to wheel drives. Connect wire harness to dual speed electrical connector at wheel drives. Secure wire harness to cordura hose sleeve with tie straps (5), as needed.

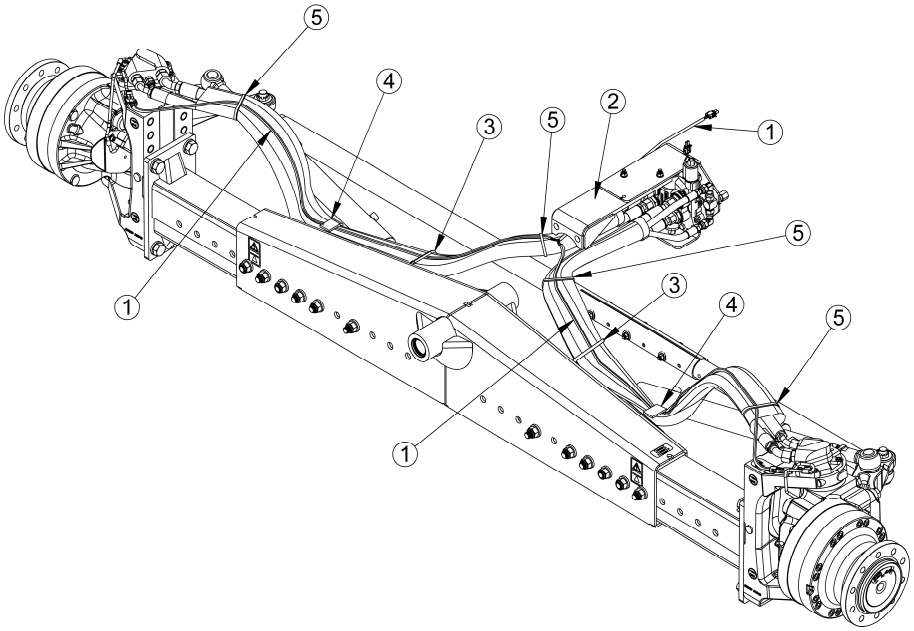

Route long leg of wire harness, with existing harness along bottom of lower frame, directly above rear axle to the left side of combine. Secure wire to existing wire harness. On left side of combine follow existing wire harness up the lower frame bolster (6) to the upper/lower frame junction. Route harness along frame junction toward front of combine and route along hydrostatic hoses to front hydrostatic motor. Keep wire harness away from all moving parts and secure to existing harness or hoses. Connect wire harness to existing pigtail connector from main harness above front Hydrostatic Motor.

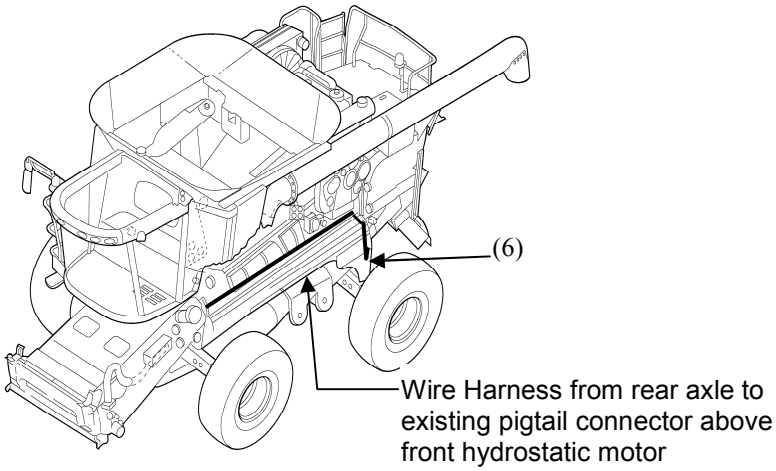

Mounting Rocker Switch/Activating PRA

For AF 2012 models

On/Off Rocker Switch
Remove switch cover on the right hand console.

Dual Speed Rocker Switch
Remove switch cover on the right hand console.
When installing dual speed kit on 2004 or prior model AFX combine, switch pad (87282484) must be purchased and installed with kit.

Activate PRA
Using the touch screen on the right hand console.

1. Select the Configuration Info Screen
2. Select Driveline
3. Scroll down to REAR WHEEL ASSIST set the value to INSTALLED
4. Set DUAL RANGE to INSTALLED if installing 2-speed unit

After modifying these values, verify that settings have been changed.

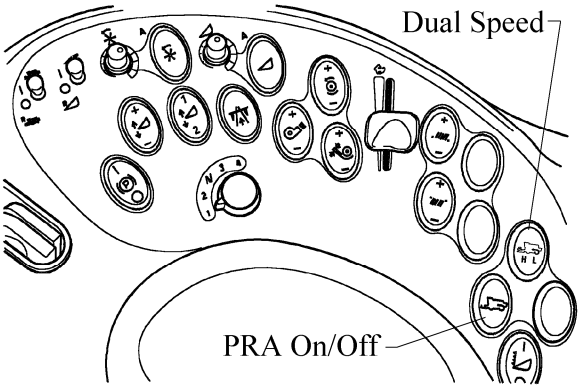

Mounting Rocker Switch/Activating PRA

For AF 2013 and after models

On/Off and Dual Speed Switch
Remove switch cover on the right hand console.

Activate PRA
Using the touch screen on the right hand console.

5. Select the Configuration Info Screen
6. Select Driveline
7. Scroll down to REAR WHEEL ASSIST set the value to INSTALLED
8. Set DUAL RANGE to INSTALLED

After the Service Tool has finished modifying these values, verify that settings have been changed.

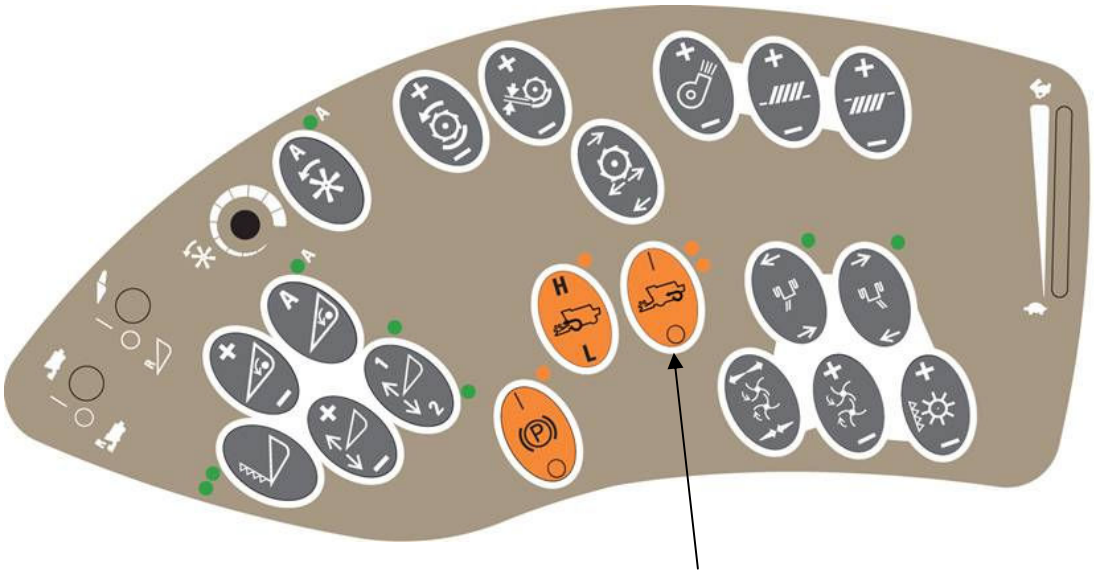

PRA On/Off and Dual Speed Switch

Pre-Start Procedures

Turn steering wheels a full left and right hand turns and check that steering stop bolts contact c-frame. Check for tire clearance with frame or side panels in extreme oscillation angles. Make any necessary adjustments. Return wheels to straight ahead position.

Check that all bolts, nuts and hydraulic connections are tightened to specification.

Check that all hoses and wires are routed properly, free and clear of moving parts and suitably secured.

Check wiring. Turn ignition switch "ON". Do NOT start engine. Operate ***MUD HOG*** switch "ON" and "OFF". Listen for soft clicking sound at valve solenoid to insure proper wiring function.

Fill hydrostatic reservoir. Follow CASE IH specifications and recommendations concerning hydrostatic fluid and the servicing of filters.

Start-Up Procedure

After having completed the installation or servicing of the rear wheel drive system on a hydrostatic drive machine, the following start-up procedure must be performed to insure adequate bleeding and flushing of the newly installed or serviced hydraulic components. This procedure also serves to check proper plumbing of the hydraulic circuit.

IT IS IMPORTANT THAT THESE INSTRUCTIONS BE CARRIED OUT AS SPECIFIED. Any alteration of this procedure will defeat its purpose, which is to bleed air out of the system. Special attention must be given to the ½ inch limited movement of the hydrostatic control lever, as it is critical not to allow excessive oil flow during this procedure. If at any time while performing this procedure, a malfunction occurs that causes the hydrostatic system to be reopened, such as disconnecting a hose of fitting, it is necessary to begin the procedure again at STEP 1.

STEPS 1-7 of this procedure are performed with the front drive wheels of the machine on the ground and chocked securely, and the *MUD HOG RWD* axle raised and secured such that the rear wheels remain off the ground with sufficient clearance around the machine. At all times maintain proper fluid level in the hydrostatic reservoir.

STEP	*ENGINE SPEED*	*GEAR SELECTOR*	*MUD HOG SWITCH*	*HYDRO LEVER*	*TIME*	*COMMENTS*	
1	1/2 SPEED	NEUTRAL	ON	NEUTRAL	3 MIN	BLEED AIR ENTIRE SYSTEM	REAR WHEELS OFF THE GROUND
2	HIGH IDLE	NEUTRAL	OFF	1/2 INCH FORWARD	2 MIN	FLUSH FORWARD MAIN SYSTEM	
3	HIGH IDLE	NEUTRAL	OFF	1/2 INCH REVERSE	2 MIN	FLUSH REVERSE MAIN SYSTEM	
4	HIGH IDLE	NEUTRAL	ON	1/2 INCH REVERSE	30 SEC MAXIMUM	CHECK CORRECT ROTATION OF MUD HOG	
NOTE: A) If wheel(s) rotate reverse - go to STEP 6 B) If no rotation – go to STEP 5 (DO NOT repeat – check valve) C) If wrong rotation – correct forward/reverse circuit – go to STEP 1 D) If dual speed motors – activate displacement control switch – check for change of speed of MUD HOG tires							
5*	LOW IDLE	HIGH GEAR HOLD BRAKES	ON	1/2 INCH REVERSE MAXIMUM	15 SEC MAXIMUM	CHECK CORRECT ROTATION OF MUD HOG	
6*	HIGH IDLE	HIGH GEAR HOLD BRAKES	ON	1/2 INCH FORWARD	4 MIN	FLUSH FORWARD MUD HOG SYSTEM	
7*	HIGH IDLE	HIGH GEAR HOLD BRAKES	ON	1/2 INCH REVERSE	4 MIN	FLUSH REVERSE MUD HOG SYSTEM	
8*	1/2 SPEED	HIGH GEAR HOLD BRAKES	ON	1/4 INCH FORWARD	15 SEC MAXIMUM	FORWARD PRESSURE CHECK FOR LEAKS	REAR WHEELS ON THE GROUND
9*	1/2 SPEED	HIGH GEAR HOLD BRAKES	ON	1/4 INCH REVERSE	15 SEC MAXIMUM	REVERSE PRESSURE CHECK FOR LEAKS	

*Place gear selector in 3rd gear, as Powered Rear Axle will not activate in 4th gear on these machines.

4WD Mud Hog® Vinyl Decal Application Instructions

To apply your decal, please follow the instructions below:

1. Clean area above rear wheel on ladder side of machine to remove dirt and grime.

2. Without removing the paper backing, position decal on surface exactly where you want it.

3. Once the decal is in position, place a piece of masking tape along the top edge to hold the decal in place.

4. The decal should be sitting on the surface like a flap. Lift up the decal and remove the paper backing.

5. With the backing paper completely removed from the decal & transfer tape, gently lower the decal with the transfer tape back down to the surface and rub it down lightly with your hand.

6. The transfer tape should still be on the side of the decal facing you. This allows you to rub the decal without scratching or damaging the decal. Take a squeegee or credit card and firmly rub the transfer tape and thus the decal until it is firmly adhered to the surface.

7. Finally, peel off the transfer tape and masking tape gently. The decal will adhere to the surface much more aggressively than the transfer tape. The transfer tape should lift easily leaving behind no sticky residue.

8. Your decal installation is complete. If there are bubbles present under the decal that cannot be removed by working them to edge, a small needle or pin can be used to puncture the bubble and remove the air. A small pin hole will not be seen after the air bubble has been worked out.